INSTALLATION AND OPERATION MANUAL

Synapse GFS100

3Gb/s, HD and SD Frame Synchronizer with Optional Audio Shuffler

Version 1.00 | November 2021

Corporate
+32 4 361 7000

North & Latin America
+1 973 575 7811

Asia & Pacific
+852 2914 2501

Other regional offices
evs.com/contact/offices

→ evs.com

Disclaimer

This manual and the information contained herein are the sole property of EVS Broadcast Equipment SA and/or its affiliates (EVS) and are provided "as is" without any expressed or implied warranties, including, but not limited to, the implied warranties of merchantability and fitness for a particular purpose. In particular, EVS makes no warranty regarding the use or the consequences of use of this manual and the information contained herein. Furthermore, EVS may not be held liable for any direct or indirect, incidental, punitive or consequential loss, damage, cost or expense of any kind whatsoever and howsoever resulting from the normal or abnormal use of this manual and the information contained herein, even if advised of the possibility of such loss, damage, cost or expense.

While every effort has been made to ensure that the information contained in this manual is accurate, up-to-date and reliable, EVS cannot be held liable for inaccuracies or errors that may appear in this publication. The information in this manual is furnished for informational purpose and use only and subject to change without notice.

This manual cancels and replaces any previous versions thereof.

Copyright

Trademarks

All product and brand names are registered trademarks and trademarks of EVS or of their respective owners.

Improvement Requests

Your comments will help us improve the quality of the user documentation. Please send improvement requests, or report any error or inaccuracy on this user manual by e-mail to doc@evs.com.

Regional Contacts

You will find the full list of addresses and phone numbers on the following webpage: https://evs.com/contact/offices.

User Manuals on EVS Website

The latest version of the user manual, if any, and other user manuals on EVS products can be found at the EVS download center, on the following webpage: https://download-area.evs.com.

General Information

ALWAYS disconnect your entire system from the AC mains before cleaning any component. The product frame (SFR18, SFR08 or SFR04) must be terminated with three-conductor AC mains power cord that includes an earth ground connection. To prevent shock hazard, all three connections must always be used.

NEVER use flammable or combustible chemicals for cleaning components.

NEVER operate this product if any cover is removed.

NEVER wet the inside of this product with any liquid.

NEVER pour or spill liquids directly onto this unit.

NEVER block airflow through ventilation slots.

NEVER bypass any fuse.

NEVER replace any fuse with a value or type other than those specified.

NEVER attempt to repair this product. If a problem occurs, contact your local EVS distributor.

NEVER expose this product to extremely high or low temperatures.

NEVER operate this product in an explosive atmosphere.

To reduce the risk of fire or electrical shock, do not expose this appliance to rain or moisture.

This product complies with the requirements of the product family standards for audio, video, audio-visual entertainment lighting control apparatus for professional use as mentioned below.

CE	EN60950	Safety
	EN55103-1: 1996	Emission
	EN55103-2: 1996	Immunity

Tested to comply with FCC Standards

FOR HOME OR OFFICE USE

This device complies with Part 15 of the FCC Rules. Operation is subject to the following two conditions:

1. This device may cause harmful interference, and
2. This device must accept any interference received, including interference that may cause undesired operation.

Contents

ICONOGRAPHY

	Note		Tip		Warning

What's New?

In the Installation and Operation Manual the icon NEW ! has been added on the left margin to highlight information on updated features.

The changes linked to new features in version 1.00 of GFS100/110 are listed below.

SMPTE ST 352 Payload Identifier

- See section "Inserter" on page 11.

1. Introduction

Synapse is a modular system designed for the broadcast industry. High density, intuitive operation and high-quality processing are key features of this system. Synapse offers a full range of converters and processing modules. Please visit the EVS website at www.evs.com to obtain the latest information on our new products and updates.

Local Control Panel

The local control panel gives access to all adjustable parameters and provides status information for any of the cards in the Synapse frame, including the Synapse rack controller. The local control panel is also used to back-up and restore card settings. Please refer to the RRC18, RRC10, RRC04, RRS18 and RRS04 manuals for a detailed description of the local control panel, the way to set up remote control over IP and for frame-related settings and status information.

Remote Control Capabilities

The remote-control options are explained in the rack controller (RRC18 / RRC10 / RRC04 / RRS18 / RRS04) manual. The method for connecting to a computer using Ethernet is described in the RRC/RRS manual.

Cortex software will increase system flexibility of one or more Synapse frames.

Although it is not required to use Cortex with a Synapse frame, you are strongly advised to use a remote personal computer or laptop PC with Cortex installed, as this increases the ease of use and understanding of the modules.

2. Unpacking and Placement

Unpacking

The EVS Synapse card must be unpacked in an anti-static environment. Care must be taken NOT to touch components on the card – always handle the card carefully by the edges. The card must be stored and shipped in anti-static packaging. Ensuring that these precautions are followed will prevent premature failure of components mounted on the board.

Placing the Card

The Synapse card can be placed vertically in an SFR18 frame or horizontally in an SFR04 and SFR08 frame. Locate the two guide slots to be used, slide in the mounted circuit board, and push it firmly to locate the connectors.

Correct insertion of the card is essential, as a card that is not located properly may show valid indicators, but will not function correctly.

On power up, all LEDs will light up for a few seconds. This is the time it takes to initialize the card.

Please refer to "Appendix 2: Card Dip Switches for BHX and Fiber Configurations" on page 35 before connecting any back panel.

3. Quick Start

Powering Up

On powering up the Synapse frame, the card set will use basic data and default initialization settings. All LEDs will light up during this process. After initialization, several LEDs will remain lit – the exact number and configuration is dependent upon the number of inputs connected and the status of the inputs.

Changing Settings and Parameters

The front panel controls or Cortex can be used to change the settings. An overview of the settings can be found in later chapters of this manual. Please refer to "Graphical User Interface" on page 1 and "Events Menu" on page 24.

Front Panel Control

Front Panel Display and Cursor

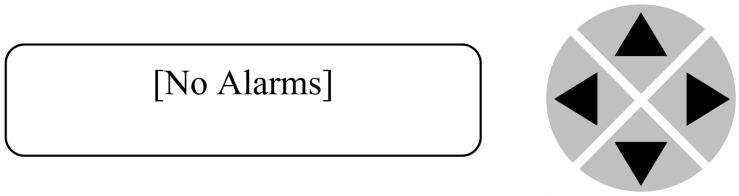

Settings are displayed and changed as follows:

Use the cursor 'arrows' on the front panel to select the menu and parameter to be displayed and/or changed.

▶ Move forward through the menu structure.

◀ Go back through the menu structure.

▲ Move up within a menu, or increase the value of a parameter.

▼ Move down through a menu or decrease the value of a parameter.

When editing parameters, pressing ▶ twice will reset the value to its default setting.

How to Change Parameters Using the Front Panel Control

With the display as shown below:

```
RRC18 [Select Card]
>S01=SFS10
```

Pressing ▶ selects the SFS10 in frame slot 01.

The display changes to indicate that the SFS10 has been selected. In this example the Settings menu item is indicated.

```
SFS10 [Select Menu]
>Settings
```

Pressing the ▶ selects the menu item shown, in this example Settings.

(Pressing ▲ or ▼ will change to a different menu, e.g. Status, Events).

The display changes to indicate that the SFS10 Settings menu item SDI-Format has been selected and shows that its current setting is Auto.

```
SFS10 [Settings]
>SDI-Format=Auto
```

Pressing the ▶ selects the Settings item shown, in this example SDI-Format.

(Pressing ▲ or ▼ will change to a different setting, e.g. Mode, H-Delay).

The display changes to indicate that the SFS10 Edit Setting menu item SDI-Format has been selected.

```
SFS10 [Edit Setting]
SDI-Format>Auto
```

To edit the setting of the menu item, press ▲ or ▼.

All menu items can be monitored and/or changed in this way. Changing a setting has an immediate effect.

EVS Cortex Software

Cortex can be used to change the settings of Synapse modules from a PC, either locally or remotely. The software enables communication based on TCP/IP between the Setup PC and Synapse frames/modules.

Each Synapse frame is addressed through its rack controller's unique IP address, giving access to each module, its menus and adjustment items. Cortex has access to data contained within the Synapse module and displays it on a GUI. The software has an intuitive structure following that of the module that it is controlling.

For operation of Cortex, please refer to the Cortex help files.

Menu Structure Example

Slot	Module		Item		Parameter		Setting
▲							
▲							
S02			Identity				
▲			▲				
S01	SFS10	►	Settings	►	Standard dig	►	Auto
▼			▼		▼		▼
S00	RRC18		Status		Mode		625
			▼		▼		▼
			Events		Ref-Input		525
					▼		
					H-Delay		
					▼		
					▼		

Further information about Front Panel Control and Cortex can be obtained from the ERC, ERS, RRC and RRS operational manuals and the Cortex help files.

4. The GFS100-110 Card

Introduction

The GFS100-110 is a frame synchronizer with backup inputs and 16 channel audio transparency and color correcting capabilities. The powerful matrix multiplexer can feed audio from the embedded domain into the Synapse bus to an ADD-ON card like the DIO48. This matrix multiplexer also allows for audio to be inserted from the ADD-ON bus into the embedded domain of the GFS100-110. The GFS110 adds a full audio shuffler and audio proc-amp with gain and phase control.

The GFS100-110 is compatible with 270Mb/s, 1.5Gb/s and 3Gb/s for full 1080p/50 or 1080p/59.94 use.

Features

- 3 inputs: 2 SDI and 1 composite.
- Handles complete asynchronous switching at the input
- Compatible with the following input formats (auto-selecting): 1080p59.94/50/25/24, 1080i59.94/50, 720p59.94/50, SD525/626.
- Frame sync with output phase control in Frames, Lines and pixels with respect to reference. Delay setting are stored per output format for a constant latency operation.
    - 30 Frames delay offset (per channel) for all 1080 formats
    - 60 Frames delay offset (per channel) for all 720 formats
    - 125 Frames delay offset (per channel) for all SD formats
- 5 GPI inputs assignable to different preset banks
    - Input selection
    - Audio shuffling, gain and phase (110 only)
- Color corrector
- Transparent for 16 channels of embedded audio
- Embedded domain cross input audio shuffling, gain and phase control (110 only)
- Embedding and de-embedding through synapse bus
- Video proc-amp (Y and C control)
- Hue control for NTSC inputs
- Locks to a Bi-Level or a Tri-level sync, or to an SDI input.
- Full control and status monitoring through the front panel of the SFR04/SFR08/SFR18 frame and the Ethernet port (ACP)

The frame synchronizer works at best if the inputs are switched according the SMPTE guidelines described in RP168.

This ensures that not only the picture but also the ancillary data remains correct. The frame synchronizer however can handle complete asynchronous switching at the input.

To ensure correct operation the F-delay of the card needs to be 1 or higher so there is enough time to mask the error.

Applications

GFS100-GFS110:

- Transmission output frame synchronizer with backup input.
- General purpose post-router autophaser.

GFS110 only:

- Combining embedded audio channels of 2 inputs into 1.

Block Schematic

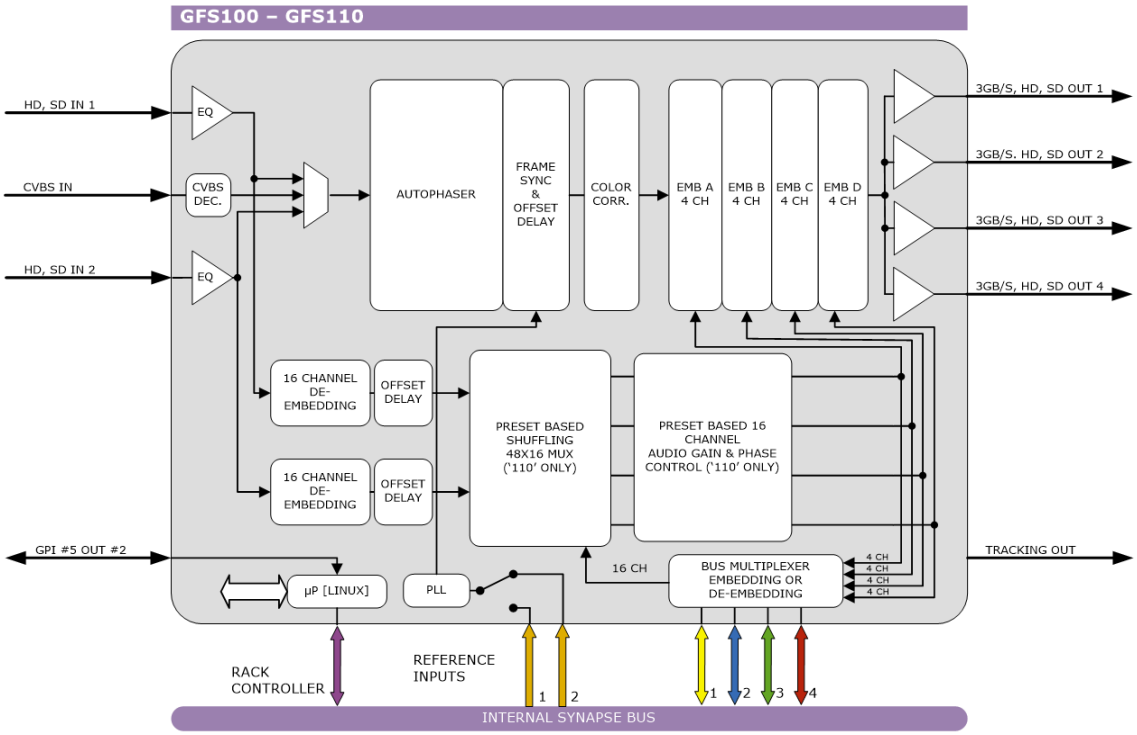

5. Settings Menu

Introduction

The Settings menu displays the current state of each GFS100/110 setting and allows you to change or adjust it.

Settings can be changed using the front panel of the Synapse frame (SFR18, SFR08 or SFR04) or with Cortex. The SCP08 control can also be used. Please refer to "Quick Start" on page 3 for information on the Synapse front panel control and Cortex.

All items preceded with a # sign are part of the presets.

5.1. System Settings

Setting	Description
IO-Ctrl	This card has separate presets for the input and output settings under the 'SYSTEM SETTINGS' header. With this item you select how the IO presets are controlled: manually (Manual) or via GPI-triggers (GPI, GPI-A, GPI-B or GPI-C). By default it is set to Manual.
IO_Prst_Act	With this item you can manually change the currently active IO settings. Can be any preset between 1 and 16. By default it is set to 1. All menu settings that are preceded by the # prefix under the 'SYSTEM SETTINGS' header are part of the preset.
IO_Prst_Edit	Here you can select which of the 16 selectable IO settings presets you want to edit. Changing this will not change the active preset, unless the currently active preset is the one you are going to edit. All menu settings that are preceded by the # prefix under the 'SYSTEM SETTINGS' header are part of the preset.
#Inp_SelA	With this item you can select which input you want to use for Channel A. Can be SDI-1 (SDI input 1), SDI-2 (SDI input 2) or Analog (CVBS in). You can also choose a Zoneplate or Colorbar as input. Can also be set to Off to switch off Channel A entirely. The default for this setting is SDI-1.

#CVBS-Frmt	With this item you can set the format of the CVBS input. Possible formats to select here are (default is Auto): • PAL-M • PAL-N • NTSC-M • NTSC-4.43 • NTSC-J • SECAM • PAL-60 • PAL-BGHID • Auto (automatic detection and selection between NTSC-J and PAL-BGHID)
#Out-Frmt	With Out-Frmt you can set what the output should be of channel A as well as channel B. Possible settings are: • 1080i60 (default) • 1080i50 • 1080p60 • 1080p50 • 1080p30 • 1080p25 • 1080p24 • 1080p24sf • 720p60 • 720p50 • SD525 • SD625 • AutoA, sets the output format automatically according to what has been detected).
#IO-Map	With this setting you can select the 3Gb/s mapping in case the input format is 1080p50 or 1080p60. Can be manually set to Level A (default) or Level B. You can also choose to set it to auto, in which case the GDL will automatically detect whether the input is Level A or Level B.
#Switch-Back	When this setting is set to on, the input selection will switch when the active input is lost. Set to off will not switch the input on input loss. Set to once, the switch will only be done once, and will not switch back when the input fails again. Default is on.
#F_delay	F-Delay sets the number of delayed Frames. The available range is from 0 to 250 fields (dependent on the I/O). Default is 0F. The preset master for this is Out-Frmt, hence the # prefix.

#V_delay	V-Delay setting allows adjustment of the vertical phase of the output signal with respect to the selected reference input. The V-Delay setting gives a delay in addition to the reference timing. For example: if the V-Delay is set to 10 TV HD lines, the output signal will be delayed by reference timing + 10 TV HD lines. The signal is delayed (advanced) with respect to the phase of the reference signal. The available range is from 0 to a maximum of 1125 lines (dependent on I/O format). The default setting is 0ln. The preset master for this is Out-Frmt, hence the # prefix.
#H_delay	The H-Delay setting allows adjustment of the Horizontal phase of the output signal with respect to the selected reference input. The H-Delay setting gives a delay in addition to the reference timing. For example: if the H-Delay is set to 10 pixels, the output signal will be delayed by reference timing + 10 pixels. The signal is delayed (advanced) with respect to the phase of the reference signal. The available range is from 0 to a maximum of 5124 pixels (dependent on I/O format). The default setting is 0px. The preset master for this is Out-Frmt, hence the # prefix.
#Freeze_A	Freeze enables the capture of one Video Field or Frame (depending on the setting Freeze_Mode). The settings for Freeze are On or Off. The default is Off.

Delay-Status	It is possible to display (in the IODelayA and IODelayB) the processing time of the card in the Status menu. This setting allows you to switch this function On or Off (default).
Lock-Mode	Lock-Mode determines whether the card is locked to its input input 1), to the reference (Ref1 or Ref2) or freerun (not locked). Can also be set to RefAuto. By default it is set to Ref1. When set to RefAuto the card chooses ref1 as its source. Whenever ref1 fails, it will switch to ref 2 (only for SFR08 and SFR18 frames and only when ref2 offers the same ref format as ref 1). When ref 1 is back up again, it will only automatically switch back to ref 1 when ref 2 fails.
Ref-Type	Sets the type of incoming reference. Can be either Bi-Level (default) or Tri- Level.
P60-P50_Sync	With this setting you can choose to synchronize each one frame or each two frames. Default is One Frame. The two-frame-synchronize mode only works for 720p60, 720p50, 1080p50 and 1080p60 standards.
ANC_BlankA	With this setting you can Blank the vertical ancillary data only (V-Only), blank the horizontal ancillary data only (H-only) or blank both vertical and horizontal ancillary data (H_And_V). You can also choose to not blank any data (Off), which is also default.

Freeze_Mode	Freeze_Mode allows you to choose between storing a complete Video Frame or Field (double written) in case of a video freeze. The default setting is Field.
PrstEditView	With this setting set to Follow Active, the edit preset settings (e.g. UP_Prst_editA and UP_Prst_editB) will follow the active preset when the active preset is changed. This is to avoid confusion when changing the active preset. Set to Independent, the edit preset will not automatically follow active preset changes. By default set to Follow Active.
PatternSpeed	Sets the speed of the test-pattern (see settings Inp_SelA and Inp_SelB) animation between 0 (still) and 15 (fast). Default is 1.
Input_Loss_A	Input_loss_A determines what the output of outputs A is in case of lost input: • Freeze: a capture of the last good field or frame. • Colorbar: a color bar • Zoneplate: a zone plate • Black: a black output. • Grey: a gray output. • Green: a green output. • Freeze 1 sec: a freeze of the last field or frame for 1 second. After 1 second the output framework is disabled. • Freeze 5 sec: Same as Freeze 1 sec, only holding the freeze frame/field for 5 seconds. The default setting is Freeze.

5.2. Inserter

This card can insert several data values in the VBI of the outputs. With the following settings you can choose what you want to insert.

NEW ! SMPTE ST 352 Payload Identifier

The SMPTE ST 352 Video Payload Identifier, also known as VPID, is transported within the ancillary data of an SDI stream. The ancillary packet is placed in the HANC space. This packet contains 4 bytes of data.

There are two versions of the standard. The first was published in 2011 and the second in 2013. The revision can be seen within the 4 bytes.

When the GFS100 is not processing the incoming VPID packets, they will be passed transparently. When it generates the packets, the GFS100 will output VPID packets using the 2013 standard.

Setting	Description
S352_Insert	S352_Insert enables the Video Payload Identifier insertion in the HANC space. It enables the user to insert or passthrough (On) the S352 Dynamic range and colorspace payload. When this menu item is set to On (default), it will generate a SMPTE ST352-2013 packet and overwrite the existing one (for both Luminance and Chrominance).When it is set to Off, it will pass the packet to the output as-is (only on Luminance).In HD 1080i for ATC-LTC transparency, the user may switch it Off to pass the ATC-LTC HANC packet on line 10.
Output-Matrix	This setting will only work if S352_Insert is set to On. It enables you to set the colorspace in REC709 (default) or REC2020. When set to either REC709 or REC2020, the S352 data is included in the s352 packet. (This does not change anything in the picture.)
HDR_Curve_Out	The dynamic range is the range of information between the lightest and darkest part of an image, also known as an image's luminosity. This setting enables you to set the dynamic range in standard dynamic range SDR (default), HLG, PQ or SLOG3. With all of these settings, the S352 data is included in the S352 packet. (This does not change anything in the picture.)
Bit_Depth_Out	Bit depth is the range of bits being used. This setting enables you to set the bit depth to Narrow (8bits) or Full (10bits). When set to either Narrow (default) or Full, it includes this data in the S352 packet. (This does not change anything in the picture.)
S2016-Line	With this setting you select a line in the VBI to where the AFD (SMPTE 2016) data should be written. Lines 0 till 31 are selectable. By default it is set to line 17.
Timecode_ins	Here you can set if the timecode on the inputs should be copied to the outputs (On), or to copy the timecode from input 1 to input 2 (Copy 1 => 2), or to copy the timecode from input 2 to input 1 (Copy 2 => 1). You can also turn Off timecode insertion. Default is On.
VITC_Ln_In	With this setting you can select what line of the input you want to copy the VITC data from (only when input is SD). Can be any line between line 7 and line 22. Default is line 19.
VITC_Ln_Ctrl	Here you can choose whether you want to select the line, to where you want to copy the timecode data to, manually (manual) or use the information in the ATC_DBB package to select the lines (ATC_DBB package contains information about the line duplication as well). Default is Manual.
VITC_Ln_625	When VITC_Ln_Ctrl is set to Manual, with this setting you can select a line between 7 and 22 when the output is SD625. Default is line 19.
VITC_Ln_525	When VITC_Ln_Ctrl is set to Manual, with this setting you can select a line between 7 and 22 when the output is SD525. Default is line 10.

VITC_Ln_Dup	When set to On, the VITC line is duplicated to the above selected line + 2 lines.
Ins_CtrlA	With this item you select how the inserter presets are controlled: Manually (manual), via GPI-triggers (GPI-A, GPI-B or GPI-C), via changes of the SD aspect ratio (SD_AR) or the HD aspect ratio (S2016). Default is Manual.
Ins_Prst_ActA	With this item you can manually change the currently active preset of Channel A when in transparent mode. Can be any preset between 1 and 16. By default it is set to 1. All menu settings that are preceded with a '#Ins'-prefix are part of the preset.
Ins_Prst_EditA	Here you can select which of the 16 selectable presets you want to edit when in a transparent mode. Changing this will not change the active preset, unless the currently active preset is the same you are going to edit. All menu settings that are preceded with a '#Ins'-prefix are part of the preset.
#VI-InsertA	You can turn VI insertion on or off for Channel A. Default is Off.
#VI-DataA	With the #VI-InsertA setting set to On, you can select VI values with this setting, which you want to be inserted. possible are all VI values from 4:3_0 through 4:3_7 and the settings from 16:9_0 through 16:9_7. Default is 4:3_0.
#WSS-InsertA	You can choose which type of WSS data you want to insert with this setting, or switch WSS insertion entirely off (default value). You can set it to Standard or Extended.

With the #WSS-InsertA setting set to Extended, you can select WSS extended values from the #VI-DataA setting, which you want to be inserted. Possible VI settings are 4:3_0 through 4:3_7 and the settings 16:9_0 through 16:9_7. Default is 4:3_0.

#WSS-StndA	With the #WSS-InsertA setting set to Standard, you can select WSS standard values with this setting, which you want to be inserted. possible are all WSS values from 1_vid through 8_vid and the settings from 1_flm through 8_flm. Default is 1_vid.
#WSS-ExtndA	With the #VI-InsertA setting set to Extended, you can select VI values with this setting, which you want to be inserted. Possible WSS values are 4:3_0 through 4:3_7 and the settings 16:9_0 through 16:9_7. Default is 4:3_0.
#S2016-InsertA	You can turn S2016 (AFD) insertion on or off for Channel A. Default is Off.
#S2016-DataA	With the #S2016-InsertA setting set to on, you can select AFD values with this setting, which you want to be inserted. possible are all AFD values from AFD0 through AFD15.

#OSD-StyleA	With this setting you select how the on-screen display text should be displayed. Possible are: • Off (no OSD) • Transp (transparent text) • Masked (OSD displayed in a black box) • Blink-Transp (blinking transparent text) • Blink-Masked (blinking text in a black box)
#OSD-TextA	Here you can set a 10-character long text which should be displayed on-screen when the above setting is not set to Off.

5.3. Video-Proc

Setting	Description
Y_Gain	Y-Gain controls the Yellow gain. The control range is between 0% and 200%. The default setting is 100%.
C_Gain	C-Gain controls the Cyan gain. The control range is between 50% and 150%. The default setting is 100%.
GainA	With this setting you control the overall gain of the video between 50 and 150%. Default is 100%.
R-GainA	R-GainA controls the Red gain. The control range is between 50% and 150%. The default setting is 100%.
G-GainA	G-GainA controls the Green gain. The control range is between 50% and 150%. The default setting is 100%.
B-GainA	B-GainA controls the Blue gain. The control range is between 50% and 150%. The default setting is 100%.
BlackA	BlackA controls the total R-G-B Black gain. The range is between –128bit and 127bit. The default setting is 0bit.
R-BlackA	R-BlackA controls the Red-Black. The control range is between –128bits and 127 bits in steps of 1 bit. The default setting is 0 bit.
G-BlackA	G-BlackA controls the Green-Black. The control range is between –128bits and 127 bits in steps of 1 bit. The default setting is 0 bit.
B-BlackA	B-BlackA controls the Blue-Black. The control range is between –128bits and 127 bits in steps of 1 bit. The default setting is 0 bit.
CVBS-Hue	This item adjusts the HUE of the CVBS input. Can be set between -90 and +90 degrees. Default is 0 degrees.

5.4. Audio Proc Amp

Setting	Description
Audio-Phase	If this setting is set to Align, the card ensures audio-phase alignment between multiple audio channels and audio groups, which is necessary for multi-channel (surround) purposes. If errors in the signal-chain occur the de-embedder blocks reset synchronously to maintain audio-phase-alignment. If this setting is set to Off, the card eats-all audio including errors. Even if there are DBN/ANC/ECC or channel-sequence errors, the de-embedder will pass them. Be aware that audio-phase-alignment between multiple audio channels and audio groups can not be maintained if this setting is set to Off.
This setting can be helpful to solve problems in the field using equipment which doesn't follow the standards correctly.	
AudioStatusBits	With this setting you select whether the audio status bits should be Transparent (off) (same status bit on the outputs as on the inputs) or to overwrite (on) them with new status bits.
emb_aud_hand_A	Embedded audio handling. This card has a built-in embedder, de-embedder and audio gain stage. This menu item controls the functionality of these stages. • Blank: blanks the horizontal blanking. • Pass: passes the audio un-processed. • Process: controls the 'smart' audio handling. 'smart' audio handling: the selected groups in the following Grp-A-Sel and Grp-B-Sel setting item are de-embedded. The audio is routed through an audio gain stage and is re-embedded in the selected group afterwards. This is performed after the frame synchronizer. When a video (+embedded audio) frame needs to be rewritten or removed as a result of an asynchronous SD/HD/3Gb/s input, the audio gain stage ramps down the selected group prior to the action and ramps up afterwards. This whole process masks audio irregularities that are audible in a normal Frame synchronizer. When using the Pass setting DOLBY-E is transfered with minimum delay.
Audio_Ctrl	With this setting you select how the audio presets should be controlled. Can be either Manually (Manual), via GPI-triggers (GPI, GPI-A, GPI-B or GPI-C), via the SD aspect ratio (SD-AR) or via the HD aspect ratio (S2016).
Audio_Prst_Act	With this item you can manually change the currently active audio preset. Can be any preset between 1 and 16. By default it is set to 1. All menu settings that are preceded by the #Emb prefix are part of the preset.
Audio_Prst_Edit	Here you can select which of the 16 selectable audio presets you want to edit. Changing this will not change the active preset, unless you have selected to edit the currently active preset. All menu settings that are preceded by the #Emb prefix are part of the preset.

#Audio-Dly-sInp1 (GFS110 only)	With this item you can delay all audio on input 1 between -10000ms and 10000ms with 0.01ms increments, allowing for precise control (2 sample accuracy in practice). Default is 0ms. This item is part of the audio presets. This audio delay is calculated on top of the tracked video delay.
#Audio-Dly-sInp2 (GFS110 only)	With this item you can delay all audio on input 2 between -10000ms and 10000ms with 0.01ms increments, allowing for precise control (2 sample accuracy in practice). Default is 0ms. This item is part of the audio presets. This audio delay is calculated on top of the tracked video delay.

5.5. Embedder

Setting	Description
#Emb-AB-Mode	With Emb-AB-Mode you select how the audio in groups A and B should be embedded into the video: overwrite the existing audio, or Append. Default is **Overwrite**.
#EmbA_Grp	With this setting you select into which audio group (= 4 audio channels) of the outputs you want to embed the first 4 forwarded audio channels coming from the de-embedders/add-on bus. Can be group1, group2, group3 or group4. You can also choose to not use these 4 audio channels for anything by setting this item to off. By default it is set to Group1.
#EmbA1_Inp ~ #EmbA4_Inp	With these settings you can select where the corresponding audio channels (channel A1 till channel A4) of the outputs are coming from. In this card you can choose to get the audio from the de-embedder of SDI input 1 (Demb-SDI1) or SDI input 2 (Demb-SDI2), the embedder of the active input (Demb-Input, dependent on the current active input), from the ADD-ON bus groups, or to mute the corresponding channel (set to off). Defaults here are Off.

With this card, the ADD-ON bus can only be used to either embed audio or de-embed audio. When one of the EmbXx_Inp settings is set to embed from the ADD-ON bus, no audio will be de-embedded towards the bus anymore, not for any of the channels.

#EmbA1_Inp_Ch ~ #EmbA4_Inp_Ch (GFS110 only)	With these settings you can select which Channel of the selected input should be embedded to the corresponding output channel. Can be any channel between Ch_1 through Ch_16. Defaults for A1 through A4 are respectively Ch_1 through Ch_4.
#EmbB_Grp	With this setting you select into which audio group (= 4 audio channels) of the outputs you want to embed the second 4 forwarded audio channels coming from the de-embedders/add-on bus. Can be group1, group2, group3 or group4. You can also choose to not use these 4 audio channels for anything by setting this item to off. By default it is set to Group2.

#EmbB1_Inp ~ #EmbB4_Inp	With these settings you can select where the corresponding audio channels (channel B1 till channel B4) of the outputs are coming from. In this card you can choose to get the audio from the de-embedder of SDI input 1 (Demb-SDI1) or SDI input 2 (Demb-SDI2), the embedder of the active input (Demb-Input,dependant on the current active input), from the ADD-ON bus groups, or to mute the corresponding channel (set to off). Defaults here are Off. Note: With this card the ADD-ON bus can only be used to either embed audio or de-embed audio. When one of the EmbXx_Inp settings is set to embed from the ADD-ON bus, no audio will be de-embedded towards the bus anymore, not for any of the channels.
#EmbB1_Inp_Ch ~ #EmbB4_Inp_Ch (GFS110 only)	With these settings you can select which Channel of the selected input should be embedded to the corresponding output channel. Can be any channel between Ch_1 and Ch_16. Defaults for B1 till B4 are respectively Ch_5 till Ch_8.
#Emb-CD-Mode	With Emb-AB-Mode you select how the audio in groups C and D should be embedded into the video: overwrite the exsisting audio, or Append. Default is **Overwrite**.
#EmbC_Grp	With this setting you select in to which audio group (= 4 audio channels) of the outputs you want to embed the third group of 4 forwarded audio channels coming from the de-embedders/add-on bus. Can be group1, group2, group3 or group4. You can also choose to not use these 4 audio channels for anything by setting this item to off. By default it is set to Group2.
#EmbC1_Inp ~ #EmbC4_Inp	With these settings you can select where the corresponding audio channels of the outputs are coming from. In this card you can choose to get the audio from the de-embedder of SDI input 1 (Demb-SDI1) or SDI input 2 (Demb-SDI2), the embedder of the active input (Demb-Input, dependent on the current active input), from the ADD-ON bus groups, or to mute the corresponding channel (set to off). Defaults here are Off. Note: With this card the ADD-ON bus can only be used to either embed audio or de-embed audio. When one of the EmbXx_Inp settings is set to embed from the ADD-ON bus, no audio will be de-embedded towards the bus anymore, not for any of the channels.
#EmbC1_Inp_Ch ~ #EmbC4_Inp_Ch (GFS110 only)	With these settings you can select which Channel of the selected input should be embedded to the corresponding output channel. Can be any channel between Ch_1 and Ch_16. Defaults for C1 till C4 are respectively Ch_9 till Ch_12.
#EmbD_Grp	With this setting you select in to which audio group (= 4 audio channels) of the outputs you want to embed the last 4 forwarded audio channels coming from the de-embedders/add-on bus. Can be group1, group2, group3 or group4. You can also choose to not use these 4 audio channels for anything by setting this item to off. By default it is set to Group2.

#EmbD1_Inp ~ #EmbD4_Inp	With these settings you can select where the corresponding audio channels of outputs B are coming from. In this card you can choose to get the audio from the de-embedder of SDI input 1 (Demb-SDI1) or SDI input 2 (Demb-SDI2), the embedder of the active input (Demb-Input, dependent on the current active input), from the ADD-ON bus groups, or to mute the corresponding channel (set to off). Defaults here are Off. Note: With this card the ADD-ON bus can only be used to either embed audio or de-embed audio. When one of the EmbXx_Inp settings is set to embed from the ADD-ON bus, no audio will be de-embedded towards the bus anymore, not for any of the channels.
#EmbD1_Inp_Ch ~ #EmbD4_Inp_Ch (GFS110 only)	With these settings you can select which Channel of the selected input should be embedded to the corresponding output channel. Can be any channel between Ch_1 and Ch_16. Defaults for C1 till C4 are respectively Ch_13 till Ch_16.
#EmbA1_Gain ~ #EmbD4_Gain (GFS110 only)	Adjusts the gain for the corresponding audio channel between -60 and 12dB. Everything below -999 dB means the audio will be muted.
#EmbA1_Phase ~ #EmbD4_Phase (GFS110 only)	Adjusts the audio phase of the corresponding to 0 deg or 180 deg.

5.6. GPI Mode

Setting	Description
GPI-Ctrl	You can set the GPI to be triggered in a latching manner or in a non-latching manner. Default for this is Latch.

GPI_1 ~ GPI_5	In this card it is possible to make the 5 available GPI triggers part of a GPI pool that can control the various functions in the card separately (all Xx_Ctrl items of the menu). With these items you can select which pool the corresponding GPI is part of and how it should trigger. You can also choose to not use the corresponding GPI at all by setting it to Off. Possible settings are: • **GPI A**: part of GPI-A pool, triggered once Take A is closed. • **GPI B**: part of GPI-B pool, triggered once Take B is closed. • **GPI C**: part of GPI-C pool, triggered once Take C is closed. • **Take A**: part of GPI-A pool, used to trigger GPI A. • **Take B**: part of GPI-B pool, used to trigger GPI B. • **Take C**: part of GPI-C pool, used to trigger GPI C. • **GPI Prio A**: part of GPI-A pool, working in a priority manner (highest closed GPI of the pool is activated). • **GPI Prio B**: part of GPI-B pool, working in a priority manner (highest closed GPI of the pool is activated). • **GPI Prio C**: part of GPI-C pool, working in a priority manner (highest closed GPI of the pool is activated). Please refer to "GPIs Explained" for a more elaborate explanation of the GPI settings.

5.7. Network

Setting	Description
IP_Conf0	With this setting you can either let the card obtain an IP address automatically via DHCP, or assign an IP address manually. By default this is set to DHCP.
mGW0	With IP_Conf0 set to manual, this setting lets you set a Standard Gateway. Default is set to 0.0.0.0.
mIP0	When IP_Conf0 is set to manual, you can enter the preferred IP address here. By default it is set to 0.0.0.0
NetwPrefix0	Here you can set the specific network prefix if required.
mNM0	With IP_Conf0 set to manual, with this setting you can set a Netmask. Default is 0.0.0.0

6. Status Menu

Introduction

The Status menu provides information about the current status of each item listed below.

6.1. System Status

Item	Description
ActiveA	This status item indicates which input is active on outputs A1 and A2. Can be SDI-1,SDI-2 or Analog.
sInp1	This status item indicates the presence and format of a valid signal in input 1. This is displayed as: • 1080p60 • 1080p50 • 1080p30 • 1080p25 • 1080p24 • 1080p24sf • 720p60 • 720p50 • 720p30 • 720p25 • 720p24 • 1080i60 • 1080i50 • SD625 • SD525 • NA
sInp1_VI	Displays the detected VI value found in input 1. This is displayed as follows: • 4:3_0 • 4:3_1 • 4:3_2 • 4:3_3 • 4:3_4 • 4:3_5 • 4:3_6 • 4:3_7 • NA (no VI detected) • 16:9_0 • 16:9_1 • 16:9_2 • 16:9_3 • 16:9_4 • 16:9_5 • 16:9_6 • 16:9_7

sInp1_WSS-Stnd	This status item displays the detected standard WSS value of input 1. This is displayed as follows: • 1_vid • 1_flm • 2_vid • 2_flm • 3_vid • 3_flm • 4_vid • 4_flm • 5_vid • 5_flm • 6_vid • 6_flm • 7_vid • 7_flm • 8_vid • 8_flm • NA (no standard WSS detected)
sInp1_WSS-Extd	This item displays the detected extended WSS value of input 1. This is displayed as follows: • 4:3_0 • 16:9_0 • 4:3_1 • 16:9_1 • 4:3_2 • 16:9_2 • 4:3_3 • 16:9_3 • 4:3_4 • 16:9_4 • 4:3_5 • 16:9_5 • 4:3_6 • 16:9_6 • 4:3_7 • 16:9_7 • NA (no WSS extended detected)
sInp1_s2016	This item displays the detected SMPTE 2016 (AFD) values of input 1. This is displayed as follows: • AFD0 • AFD8 • AFD1 • AFD9 • AFD2 • AFD10 • AFD3 • AFD11 • AFD4 • AFD12 • AFD5 • AFD13 • AFD6 • AFD14 • AFD7 • AFD15 • NA (no S2016 detected)
sInp1_CRC_EDH	This item indicates CRC and EDH errors on input 1. Can be: • OK • Error • NA
sInp1_Map	This indicates the mapping of the 3Gb/s input 1 when the input format is 1080p50 or 1080p60. Can be Level A or Level B. When the input format is not 1080p60 or 1080p50, this item indicates NA.

sInp2	This status item indicates the presence and format of a valid signal in input 2. This is displayed as listed under sInp1.
sInp2_VI	Displays the detected VI value found in input 2. This is displayed as listed under sInp1_VI.
sInp2_WSS-Stnd	Displays the detected WSS-standard value found in input 2. This is displayed as listed under sInp1_WSS-Stnd.
sInp2_WSS-Extnd	Displays the detected WSS-extended value found in input 2. This is displayed as listed under sInp1_WSS-ext.
sInp2_s2016	Displays the detected S2016 value found in input 2. This is displayed as listed under sInp1_s2016.
sInp2_CRC_EDH	This item indicates CRC and EDH errors on input 2. Can be: • OK • Error • NA
sInp2-Map	This indicates the mapping of input 2 when the input format is 3Gb/s (1080p50 or 1080p60). Can be Level A or Level B. When the input format is not 1080p60 or 1080p50, this item indicates NA.
sInp3_WSS-Stnd	Displays the detected WSS-standard value found in input3 (CVBS input). This is displayed as listed under sInp1_WSS-Stnd.
sInp3_WSS-Extnd	Displays the detected WSS-extended value found in input3 (CVBS input). This is displayed as listed under sInp1_WSS-ext.
sInpCVBS	This status item indicates the detected input format on the CVBS input. This is displayed as one of the following values: • NTSC-J • NTSC-M • NTSC-4.43 • SECAM • SECAM-525 • PAL-BGHID • PAL-N • PAL-M • PAL-60 • NA (no input detected)
IODelayA	Displays the total delay in ms of outputs A1 and A2. Can be a value between 0ms and 15000 ms.
SwitchLnA	Displays what line is detected the switchline for channel A. Can be any line between 0 and 1125.
SwitchLn_LenA	Displays the length of the detected switchline of Channel A in pixels.
SwitchLn_PosA	Displays the position on the detected switchline where the switch occurred (in pixels) in Channel A. Only works on blanked switchlines.
FunctionA	Displays the current function outputs A1 and A2. For the card it can only be Trans, TestPattern or NA.

Ref	Displays whether a correct reference is found (Present) or not (NA).
GPI	Displays the currently closed GPI contacts. This is displayed as for instance 1_3_ when contacts 1 and 3 are closed and for instance _234 when contacts 2, 3 and 4 are closed.
GPIA	Displays the current value of GPI pool A.
GPIB	Displays the current value of GPI pool B.
GPIC	Displays the current value of GPI pool C.
OutputA-Map	This indicates the mapping of the (last known) output when the output format is 3Gb/s (1080p50 or 1080p60). Can be Level A or Level B. When the output format is not 1080p60 or 1080p50, this item indicates NA.

6.2. Net Status

Setting	Description
IP_Addr0	This item displays the status of the IP address. It can be manual, DHCP asking (default), DHCP Leased or DHCP Infin.
MAC0	This item displays the MAC address of the card.
IP0	This item displays the current IP address of the card.
NM0	This item displays the current Netmask of the card.
GW0	This item displays the current Standard Gateway of the card.

7. Events Menu

Introduction

An event is a special message that is generated on the card asynchronously. This means that it is not the response to a request to the card, but a spontaneous message.

What is the Goal of an Event?

The goal of events is to inform the environment about a changing condition on the card. A message may be broadcast to mark the change in status. The message is volatile and cannot be retrieved from the system after it has been broadcast. There are several means by which the message can be filtered.

The events reported by the GFS100-110 card are as follows:

Menu Item	Description
Announcements	Announcements is not an event. This item is only used for switching the announcement of status changes on/off. 0=off, other =on
Input_A	Input_A can be selected between 0 .. 255. 0= no event, 1..255 is the priority setting.
Input_B	Input_B can be selected between 0 .. 255. 0= no event, 1..255 is the priority setting.
Ref-Status	Reference can be selected between 0 .. 255. 0= no event, 1..255 is the priority setting.
Active_Out_A	Active output A can be selected between 0 .. 255. 0= no event, 1..255 is the priority setting.

What Information is Available in an Event?

The message consists of the following items:

- A message string to show what has happened in text, for example: “INP_LOSS”, “REF_LOSS”, “INP_RETURN”.
- A tag that also shows what happens, but with a predefined number: e.g. 1 (= loss of input), 2 (= loss of reference), 129(= 1+128 = return of input). For a list of these predefined tags, please see the table below.
- A priority that marks the importance of an event. This value is defined by the user and can have any value between 1 and 255, or 0 when disabled.
- A slot number of the source of this event.

Message String

The message string is defined in the card and is therefore fixed. It may be used in controlling software like Synapse Set-up to show the event.

Tags

The tag is also defined in the card. The tag has a fixed meaning. When controlling or monitoring software should make decisions based on events, it is easier to use the tag instead of interpreting a string. The first implementation is the tag-controlled switch in the GPI16.

In cases where the event marks a change to fault status (e.g. 1 for Loss of Input), the complement is marked by the tag increased by 128 (80hex) (e.g. 129 (81hex) for Return of Input).

The tags defined for the GFS100-110 card are:

Event Menu Item	Tag		Description
Announcements	01_{hex}=Announcements on	81_{hex}=Announcements off	Announcement of report and control values
Input_A	01_{hex}=INP_A_LOSS	81_{hex}=INP_A_RETURN	Input A lost or returned
Input_B	41_{hex}=INP_B_LOSS	$c1_{hex}$= INP_B_RETURN	Input B lost or returned
Ref-Status	02_{hex}=REF_LOSS	82_{hex}=REF_RETURN	Reference lost or returned
Active_Out_A	19_{hex}=IN_B->OUT_A	99_{hex}= IN_A->OUT_A	Input B or input A on outputs A

Priority

The priority is a user-defined value. The higher the priority of the alarm, the higher this value will be. Setting the priority to Zero disables the announcement of this alarm. Alarms with priorities equal to or higher than the Error Threshold setting of the RRC will cause the error LED on the Synapse rack front panel to light up.

Card Address

Together with the message string or the tag, the slot number or address of the card is relevant to be able to assign the event to a certain card.

8. LED Indication

Indicator	Description
Error LED	The error LED indicates an error if the internal logic of the card is not configured correctly or has a hardware failure.
Input_A LED	This LED indicates the presence of a valid SDI video signal on input A.
Input_B LED	This LED indicates the presence of a valid SDI video signal on input B.
ANC Data LED	Indicates the presence of embedded audio within the input signal.
Reference LED	Indicates the presence of a valid reference signal on the selected reference input connector (ref-1 or ref-2).
Data Error LED	This LED indicates a CRC error.
Connection LED	This LED lights up after the card has initialized. The LED lights up for 0.5 seconds every time a connection is made to the card.

9. Block Schematic

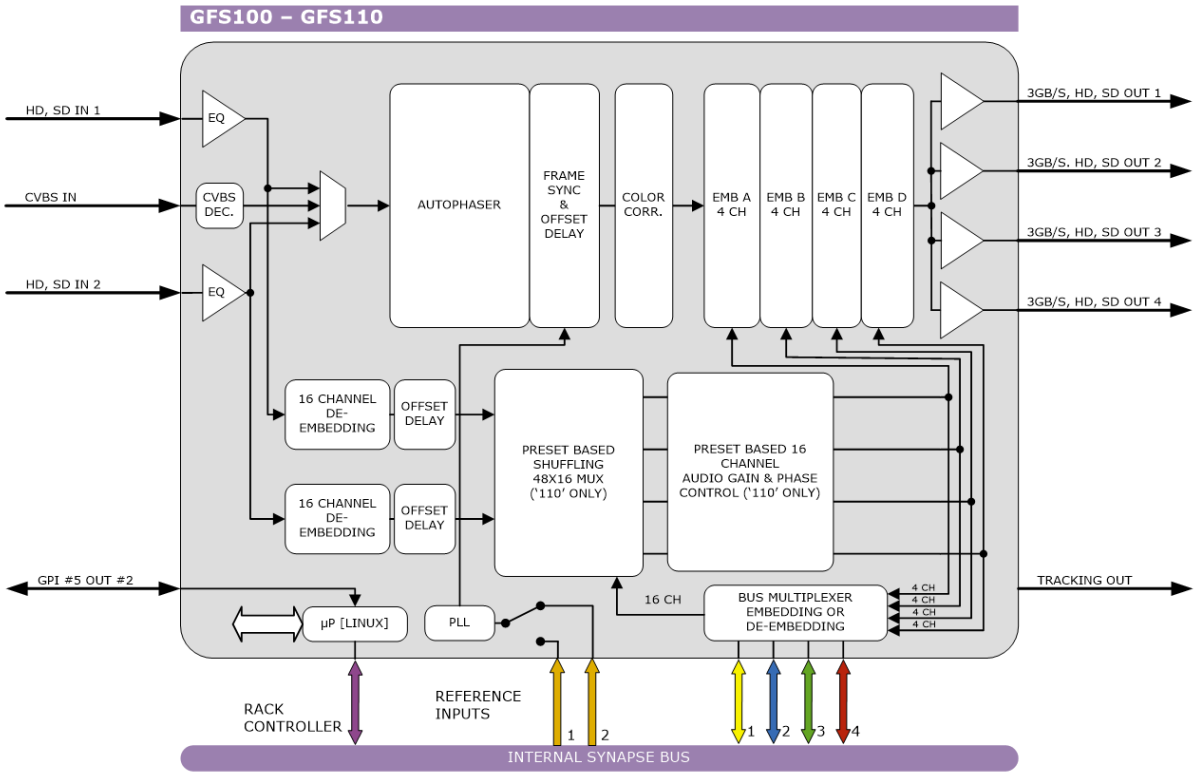

10. Connector Panels

The GFS100-110 can be used with the BPH17 or the BHX17b and their relay bypass equivalents.

The following diagrams show the pinout of the backpanels in combination with the card.

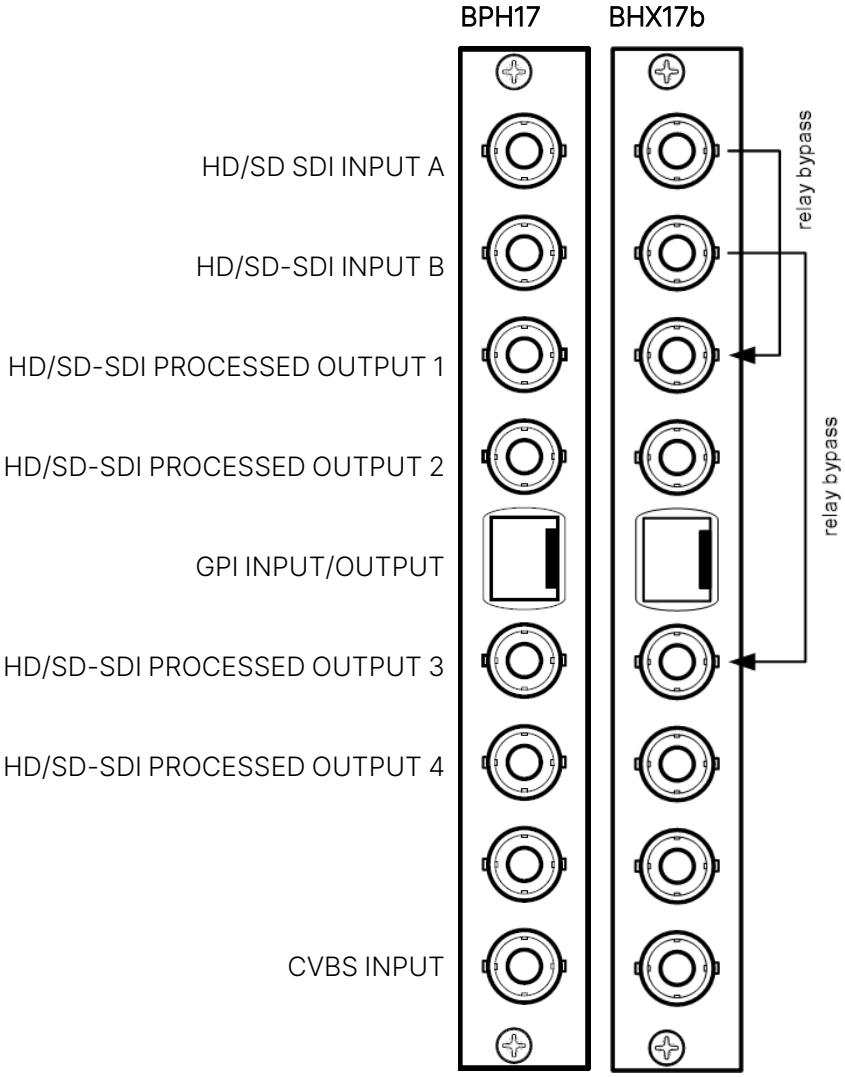

For fiber connectivity, see www.evs.com

Unused inputs and outputs must be terminated with the correct impedance.

Please refer to "Card Dip Switches for BHX and Fiber Configurations" in the Appendices before connecting any backpanel.

GPI Pinning

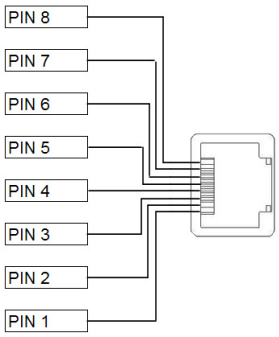

Pin	Function
1	GPI in 1
2	GPI in 2
3	GPI in 3
4	GPI in 4
5	GPI in 5
6	GPI out 1
7	GPI out 2
8	Ground

Appendices

Appendix 1: GPIs Explained

GPI Pools

This card has 5 GPI contacts. Since there are several functions you can control by using GPIs (for instance: outmode and up/down/cross-presets and audio presets), you can add each individual GPI contact to certain GPI pools. Each pool can then be assigned to control a specific setting.

Binary Mode or Priority Mode

In the GPI_1 through GPI_5 settings, you can assign each GPI contact to one of the 3 available pools. The way these contacts act together depends on whether the pool works in binary or priority mode.

Example 1: Two Pools in Binary Mode

To control the up converter presets using Pool A (Up_CtrlA set to GPI-A) and the output mode setting using Pool B (Out-mode-Ctrl set to GPI-B), with both pools working in priority mode, the GPIs have to be set up as follows:

- Set GPI_1 to GPI Prio A
- Set GPI_2 to GPI Prio A
- Set GPI_3 to GPI Prio A
- Set GPI_4 to GPI Prio A
- Set GPI_5 to GPI Prio B

Pool A now consists of GPI 1, GPI 2, GPI 3 and GPI 4 in priority mode, controlling the Up converter preset. Pool B consists only of GPI 5 (also in priority mode), controlling the Output mode setting.

Pool A now works as follows:

GPI_1 Status	GPI_2 Status	GPI_3 Status	GPI_4 Status	Set Value
0	0	0	0	Up-conv Preset 1
1	0	0	0	Up-conv Preset 2
0	1	0	0	Up-conv Preset 3
0	0	1	0	Up-conv Preset 4
0	0	0	1	Up-conv Preset 5
0	1	1	0	Up-conv Preset 4 (because highest takes priority)
1	1	1	1	Up-conv Preset 5 (because highest takes priority)

Pool B now works as follows:

GPI_5 Status	Set Value
0	A out only
1	B out only

Example 2: One Pool in Binary Mode and One in Priority Mode

Let's say we would like to control the up-converter presets using Pool A (Up_CtrlA set to GPI-A) in binary mode and the audio presets using Pool B (Audio_Ctrl set to GPI-B) in priority mode. We could do the following:

- Set GPI_1 to GPI-A
- Set GPI_2 to GPI-A
- Set GPI_3 to Take A
- Set GPI_4 to GPI Prio B
- Set GPI_5 to GPI Prio B

Pool A now consists of GPI 1, GPI 2 and GPI 3 (as take), in a binary mode, controlling the Up converter preset. Pool B now consists of GPI 4 and GPI 5 in a priority mode, controlling the audio presets.

Pool A now works as follows:

GPI 1_Status	GPI_2 Status	Set Value
0	0	Up-conv Preset 1
1	0	Up-conv Preset 2
0	1	Up-conv Preset 3
1	1	Up-conv Preset 4

Pool B now works as follows:

GPI_4 Status	GPI_5 Status	Set Value
0	0	Audio Preset 1
1	0	Audio Preset 2
0	1	Audio Preset 3
1	1	Audio Preset 3 (because highest takes priority)

Let's say we would like to control the up-converter presets using Pool A (Up_CtrlA set to GPI-A) in priority mode, the audio presets using Pool B (Audio_Ctrl set to GPI-B) in priority mode, and Out mode control using Pool C (Out-mode-Ctrl set to GPI-C) also in priority mode. We could do the following:

- Set GPI_1 to GPI Prio A
- Set GPI_2 to GPI Prio A
- Set GPI_3 to GPI Prio B
- Set GPI_4 to GPI Prio B
- Set GPI_5 to GPI Prio C

Pool A now consists of GPI 1 and GPI 2 in a priority mode, controlling the Up converter preset. Pool B now consists of GPI 3 and GPI 4 in priority mode, controlling the audio presets. Pool C consists only of GPI 5 (also in priority mode).

Pool A now works as follows:

GPI_1 Status	GPI_2 Status	Set Value
0	0	Up-conv Preset 1
1	0	Up-conv Preset 2
0	1	Up-conv Preset 3
1	1	Up-conv Preset 3 (because highest takes priority)

Pool B now works as follows:

GPI_3 Status	GPI_4 Status	Set Value
0	0	Audio Preset 1
1	0	Audio Preset 2
0	1	Audio Preset 3
1	1	Audio Preset 3 (because highest takes priority)

Pool C now works as follows:

GPI_5 Status	Set Value
0	A out only
1	B out only

Appendix 2: Card Dip Switches for BHX and Fiber Configurations

There are dip switches on the circuit board of the card itself. With these dip switches you can change the power voltages that is put on the backpanel. By default the switches are set to off, putting no power on the backpanel. The picture below displays where the switch is positioned on the card.

When using a 'normal' BPH17 (passive) backpanel with this card, the dip switch on the card itself must be switched **OFF**.

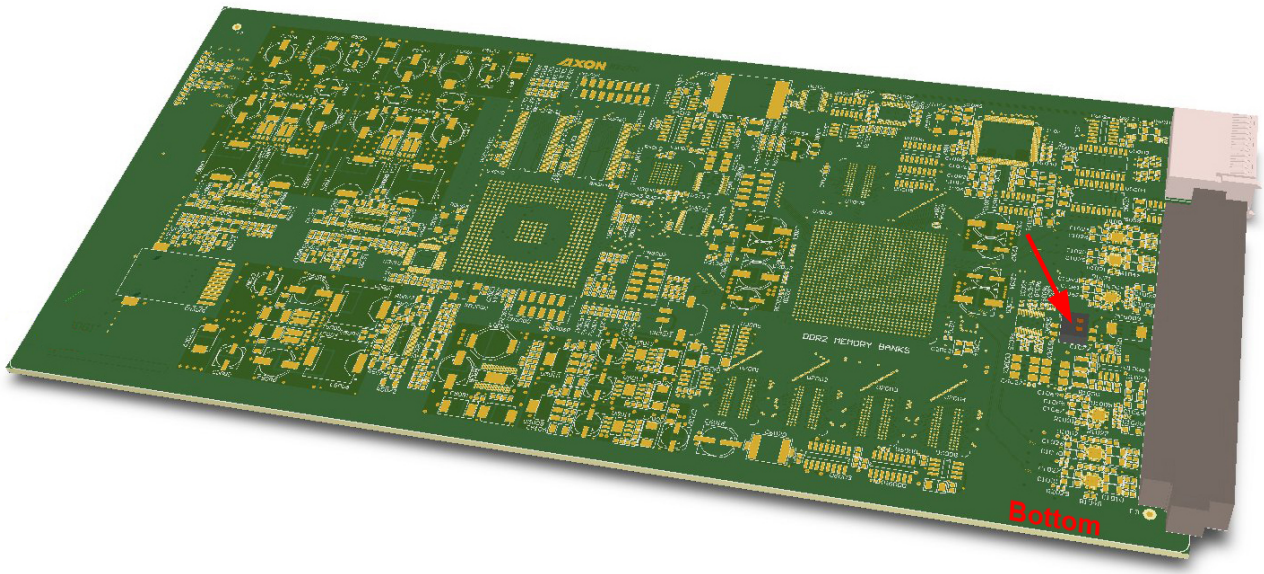

Using BPH17 with Fiber I/O

When using a BPH17 backpanel with fiber I/O, you must first set the top-side dip switch on the synapse board to **ON**. This will pass 30 volt to the backpanel. If this is not done, the relays won't work at all.

Using BHX17b

When using the backpanel with a bypass relay (BHX17b), you must first set the bottom-side dip switch on the card to **ON**. This will pass 5 volts to the backpanel. If this is not done, the relays won't work at all.

On the BHX17b itself, there are also 2 dip switches (see picture below). The bottom dip switch is not connected. With the top switch you can choose the Bypass function. There are 2 possible function indications "on" (printed on the dip switch itself) and "off":

“Direct Backpanel Switchover” dip switch set to ON:

Will make the BHX backpanel switch over to the processed signal as soon as it detects the trigger signal from the connected Synapse card. This setting will minimize the bypass time and ensures fast recovery of processed signals.

The **ON** setting is recommended if the BHX backpanel is used in combination with Synapse cards:

- which have a short initialization time, or
- which have a delayed trigger-signal onboard.

“Direct Backpanel Switchover” dipswitch set to OFF (default):

Will make the BHX backpanel switch after about 15 seconds from the moment the BHX backpanel detects the trigger signal from the connected Synapse card. This setting will allow more time for complex synapse cards to finish initialization and stabilize proper signal processing before the backpanel switches over to the processed signal.

The **OFF** setting is recommended if the BHX-backpanel is used in combination with Synapse cards:

- which are more complex and thus need a longer initialization time and do NOT have a delayed trigger signal onboard.

In case of power failure or when the Synapse board is extracted from the frame, the bypass is immediately active.

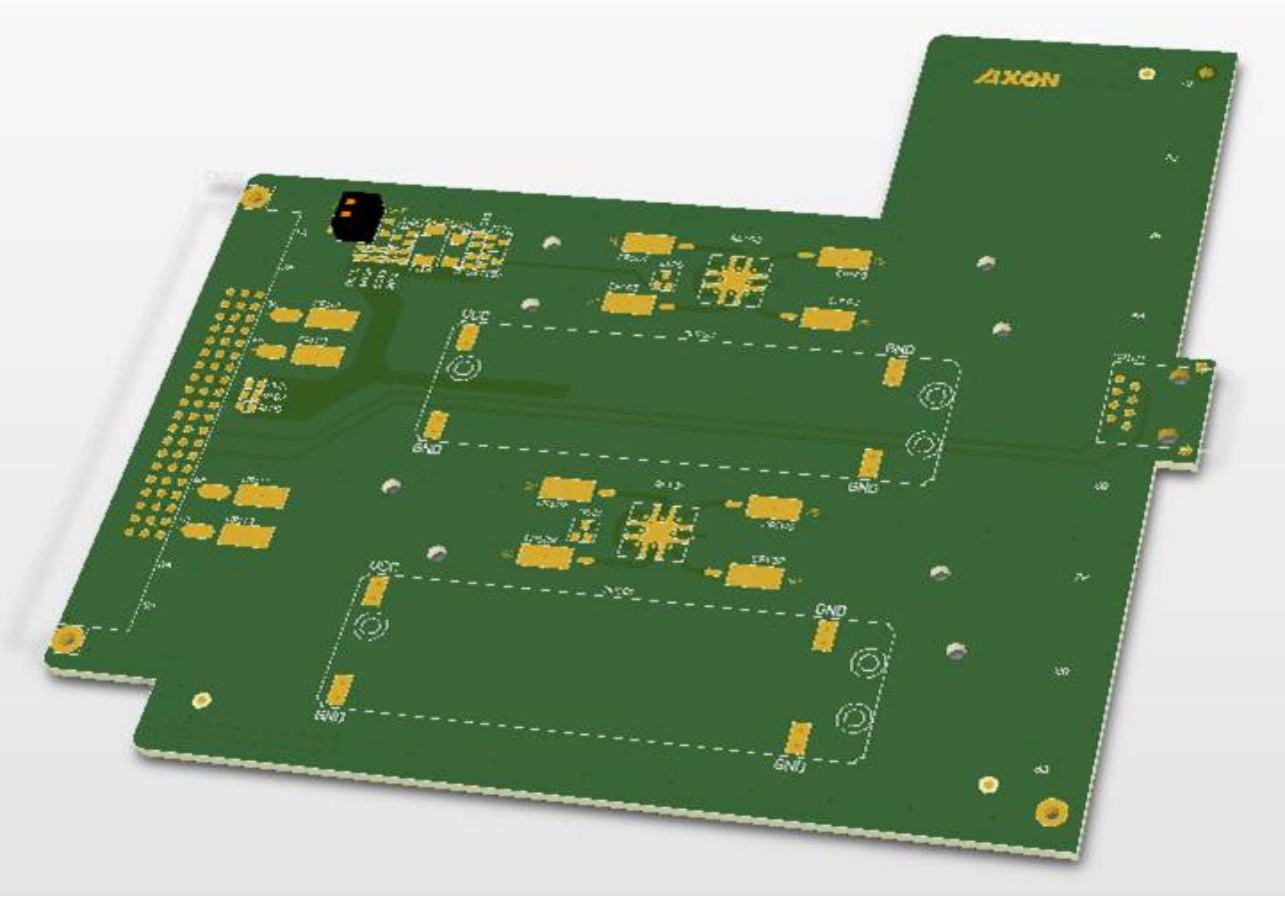

GNU Public License

Open-Source Software

This product contains open-source software licensed under the GNU Public License (GPL). A copy of the GNU Public License can be obtained from https://www.gnu.org/licenses/old-licenses/gpl-2.0.html. Under this license, you are eligible to receive a copy of the source code of this software, including any changes.

EVS Broadcast Equipment SA shall provide the source code on request either through physical distribution or electronic communication. For physical distribution you may be charged a fee that covers distribution costs. This offer is valid up to three years after date of purchase. Please direct your request to the support department of EVS Broadcast Equipment SA.

EVS Broadcast Equipment SA supports open-source software by participating in the development of open-source projects or submitting improvements to these projects. For more information, please visit https://mi-sftp.evs.com.

→ evs.com